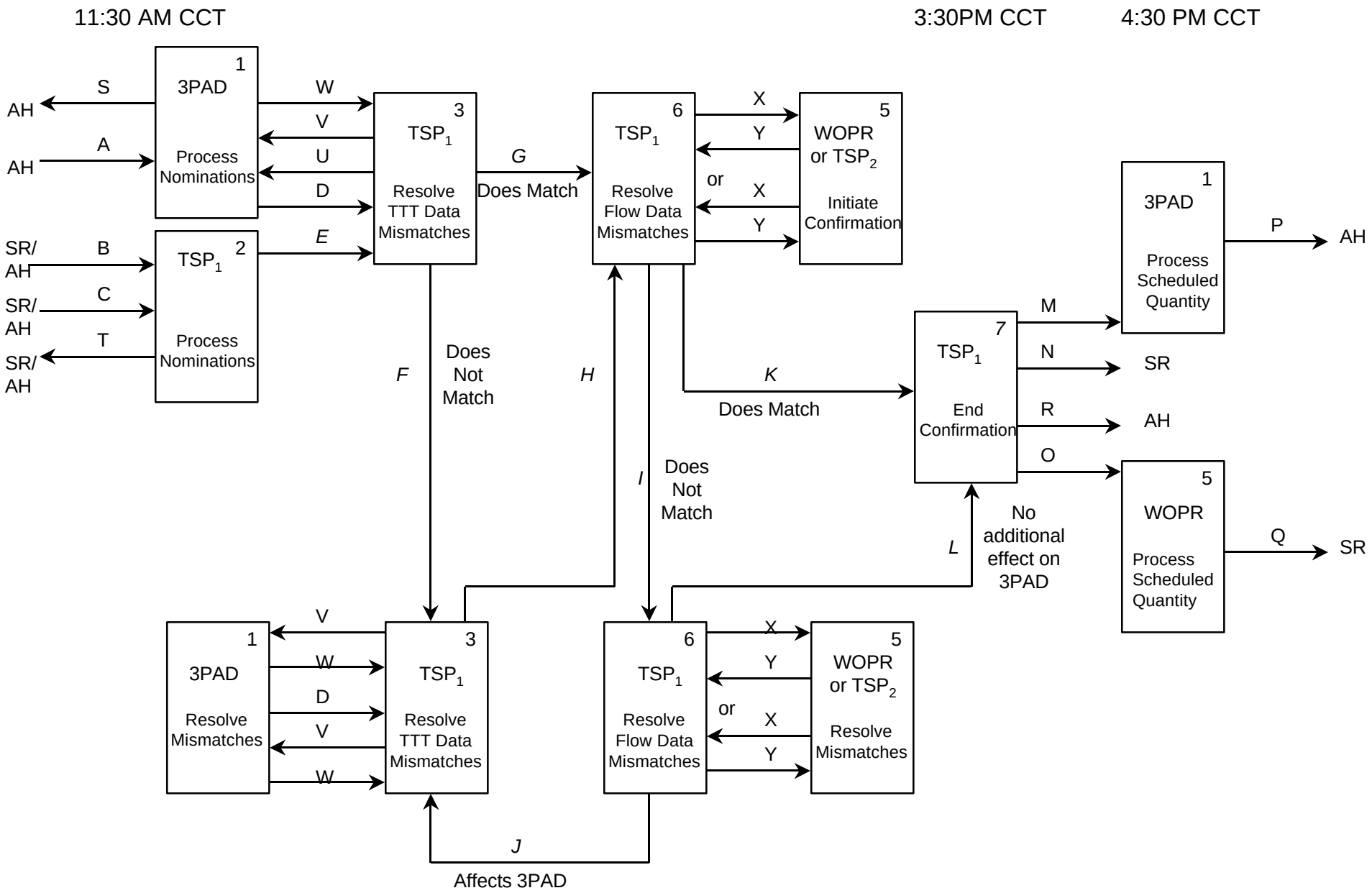# Title Transfer Tracking
# July 30, 1998
# Timing / Flow Diagram